PD6322/43

High Output Three-Way Full-Range Loudspeaker with 2 x 12" LF

PD SERIES
precision directivity

Key Features:

- [illegible] 300 (12) [illegible] 0 H
- H [illegible]
- [illegible]
- [illegible] 0 30 [illegible]
- [illegible]
- [illegible]

Applications:

- [illegible]
- [illegible] / H [illegible]
- [illegible]

322/ 3 [illegible] 0 30 [illegible] 0 H.

[illegible] 220 H 300 (12) G [illegible] 100 ( ) [illegible] 200 ( ) [illegible] 2 32H [illegible]

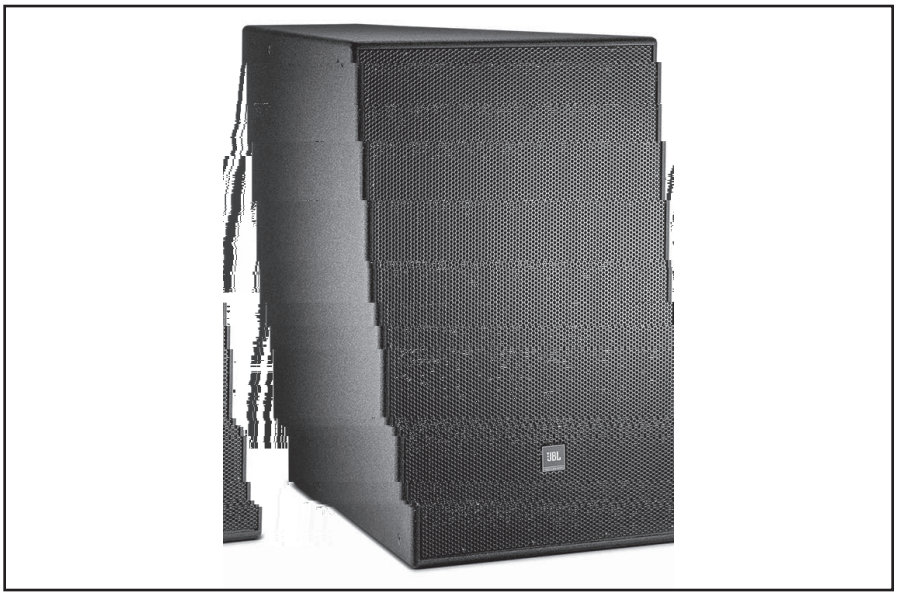

Specifications:

[illegible] [1] (-10): 1 H t 1 H	
[illegible] [1] (3): H t 1 H	
[illegible] tt : 0 30	
[illegible] ( ): 2 .1	
[illegible] (1): 1 .0	
[illegible] : [illegible] / - ([illegible]) [illegible]	
[illegible] [2] 1. H	
[illegible] : 1 00 (00), 2 . 1200 (00), 100	
( ) [3] : 3 0 (1 00), 100	
H : (300), 2	
[illegible] : 1200 (00)	
t (1): /H : 300 (1200), 100	
[illegible] : 12 - t (13)	
: 13 - t (1 3)	
H : 13 - t (1 1)	
: 13 - t (1 2)	
t t (1 1): : 111 - (/ t l)	
Transducers:	
[illegible] 2 220 H 300 (12) [illegible] t 100 ( ) [illegible]	
[illegible] : (2 [illegible] ll l)	
t t (1 , 1 t - [illegible] t l):	
[illegible] - 2H [illegible] 200 ( ) t [illegible] (3) [illegible]	
[illegible] :	
t t (1 , 1): 112 -	
H [illegible] 2 32H, 3 (1.) t [illegible] (3) [illegible]	
[illegible] :	
t t (1 1) 11 -	
: - 3 00 00 (2 2)	
H : -H 3H 300 300 (12 12)	
Physical:	
[illegible] l t 12. [illegible] l , 1 (/) t [illegible] 11- l [illegible] l .	
[illegible] tt t 20 t (t , tt , , , 2), 10 t [illegible] (lt l , t l).	
: l l . t (- H) l l . t.	
[illegible] t WRC t l t , t l [illegible] ll , lt	
: t t t l t . WRX t t	
t t , t l t , t l t	
, t , , t t .	
/ t t l .	
G ll : t 1 t t l, - , t ,	
(ll l t , t)	
l t t : t , l - l t t t t	
l . t t l t l t .2 (10 G) t	
t (.3) l . ll l t t t	
l -t , .	
t l t : l- t 10 l - 3 l 2 . , , t l t ,	
.	
1 3	
(H t l t t): (3 .0 2 . 3 .3)	
t , t .3 (1 2 l)	
t l : 22 -0000 -01 t t t 10 3 l t l lt .	

[1] l - , t t t .

[2] lt t t l t t .

[3] t , t t t t , t l , t . 2 , t l l -t 100 , t t l - t . t , t t t , ll t t t t 100 , t . l l t t t t , l t . , t t t l , t t l t t . l .

Horizontal 1/3 Octave Polars

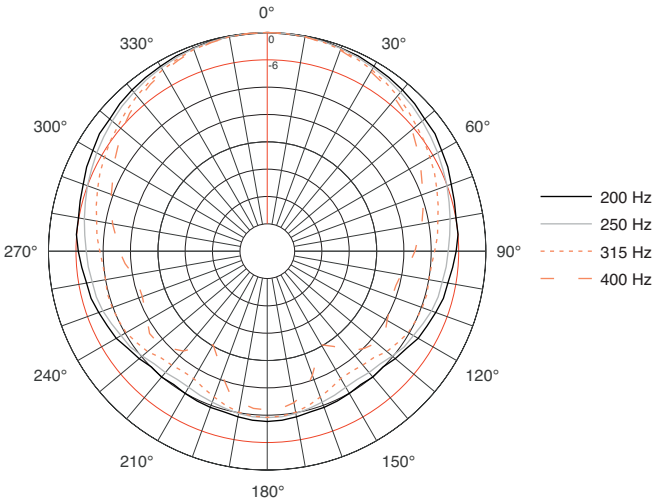

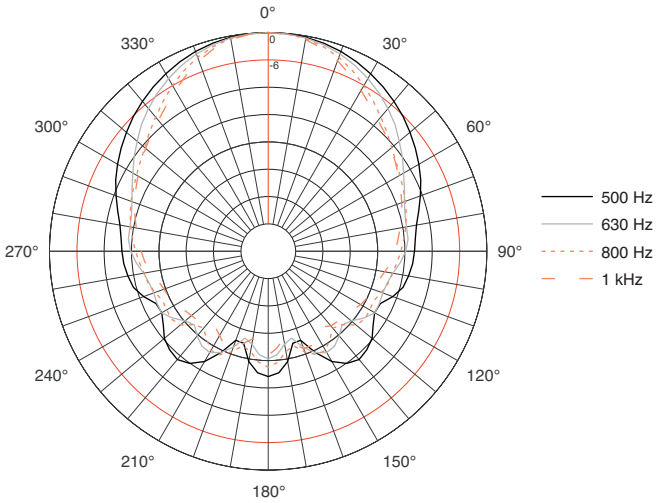

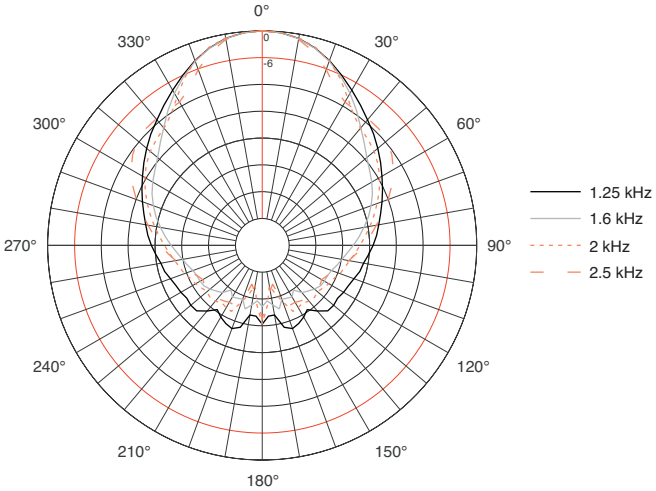

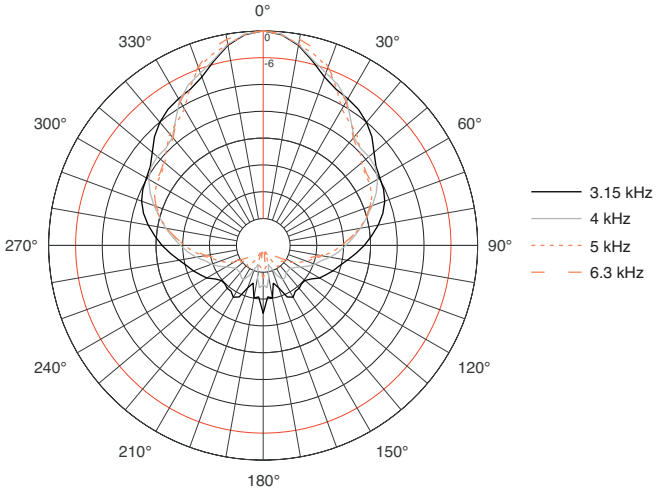

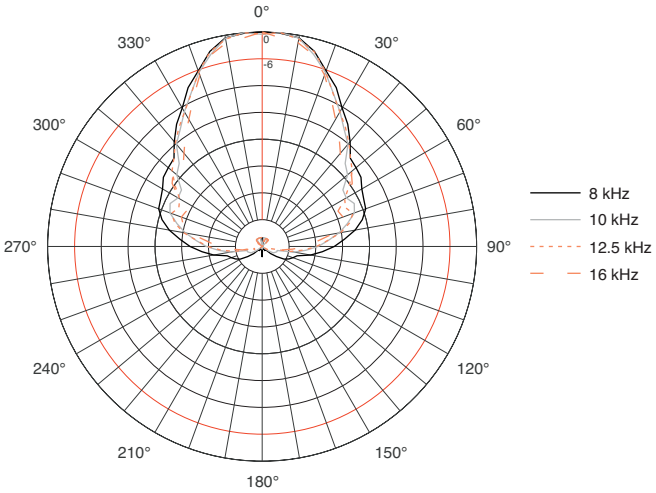

PD6322/43 High Output Three-Way Full-Range Loudspeaker

Vertical 1/3 Octave Polars

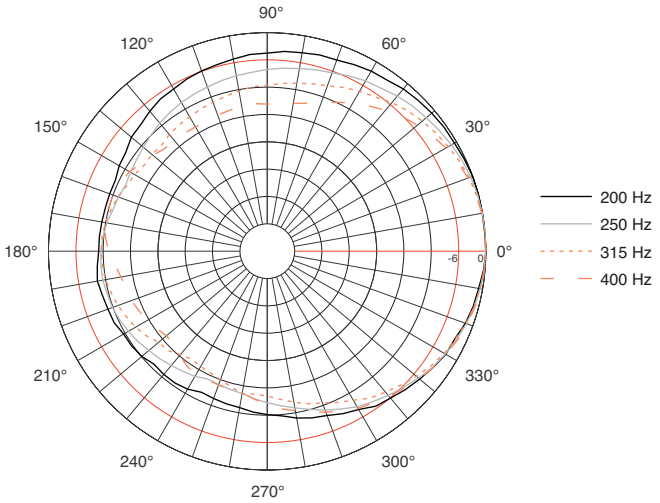

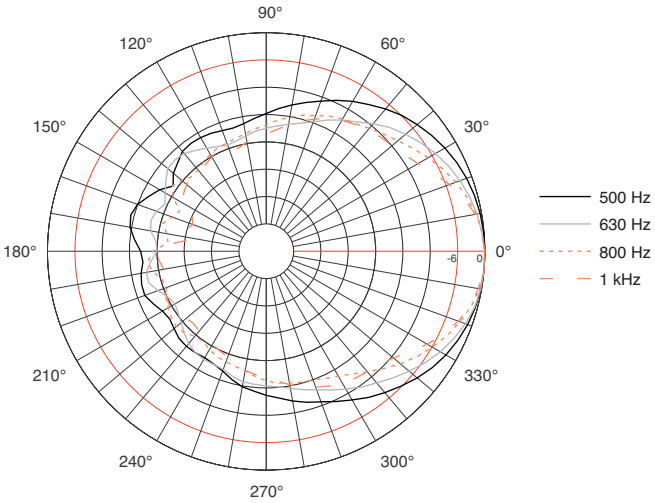

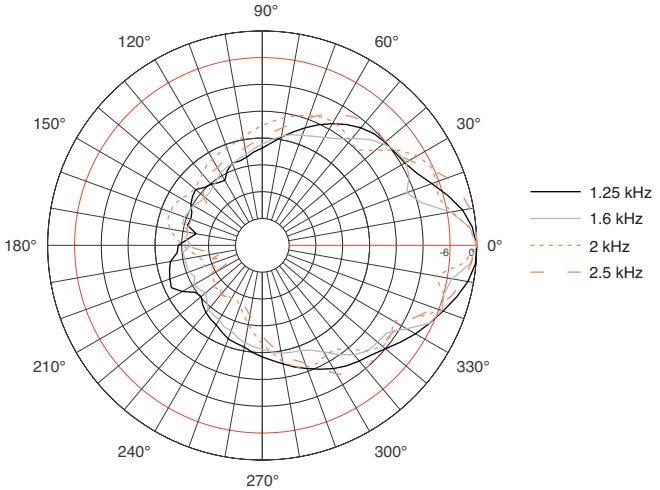

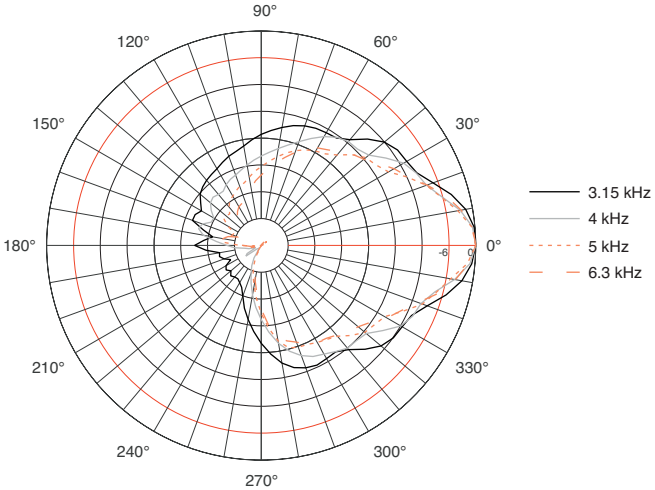

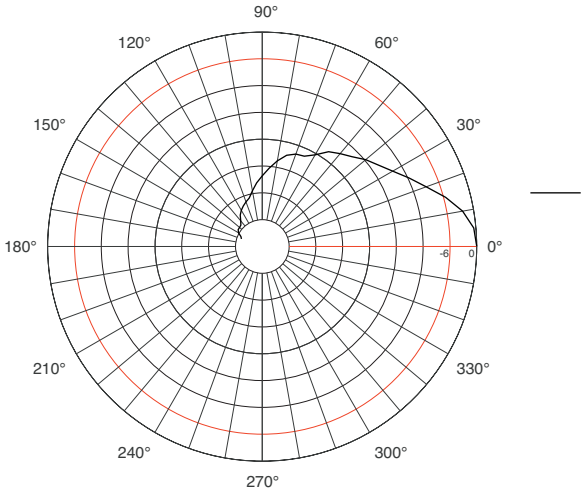

© Copyright 2014 JBL Professional

www.jblpro.com

SS PD6322/43
CRP
06/14